Xgig® 10G FCoE Load Tester

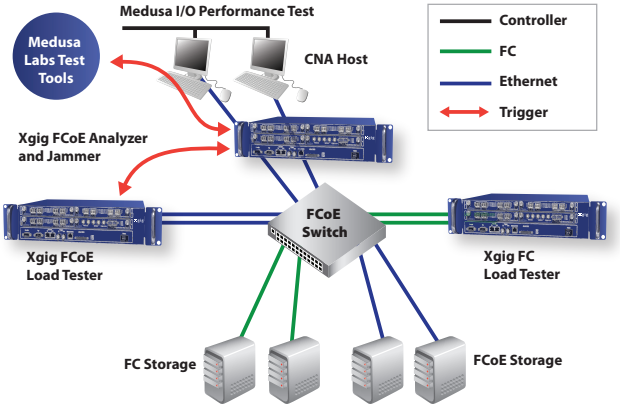

Figure 1: Example setup with the Xgig Load Tester and Medusa Lab Tools for testing FCoE switch performance.

Key Features

- Supports ETS and DCBX for bandwidth sharing among traffic classes and configuration exchanges
- Guarantees speeds to full line rate with thousands of streams and pending exchanges
- Supports a variety of port topologies among Xgig FCoE and Fibre Channel ports
- Supports FIP for FCoE discovery and virtual link establishment while also managing extended link services. Alternatively, the Xgig Load Tester also provides the option of entity instantiation directly via FCoE
- Controls traffic flow via Priority Flow Control (PFC). Each Load Tester port is capable of suspending specific stream(s) when receiving PAUSE frames as well as generating PFC PAUSE frames to stop transmissions from the other end of links
- Emulates as many as 256 VN_Ports for each ENode with complete flexibility of VLAN and priority values
- Comprehensive error injection options
- Complete automation assisted with TCL and C APIs

The new FCoE standard is considered by many to be the most promising technology for I/O consolidation at 10 Gb/s. Based upon a 10 Gigabit Ethernet switched network, FCoE switches merge Fibre Channel traffic into Ethernet traffic by encapsulating Fibre Channel frames into Ethernet packets. In order to test and verify evolving FCoE technology, developers need a hardware-based test platform that is protocol-aware for both Fibre Channel and Ethernet.

JDSU has made available the industry's leading FCoE traffic generation tool for comprehensively testing FCoE switches. The Xgig® FCoE Load Tester forms the cornerstone for testing and verifying the design of FCoE equipment, giving developers complete flexibility and visibility into FCoE traffic when used with the Xgig Analyzer. With the Xgig FCoE Load Tester, developers are able to verify performance, data integrity, scalability, network robustness, and equipment interoperability.

Overview

The Xgig FCoE Load Tester is available on Xgig 10GE blades and supports both XFP and SFP+ interfaces. While providing many of the same capabilities as the Xgig Fibre Channel Load Tester, the Xgig FCoE Load Tester also enables a range of key capabilities designed to verify the performance and resilience of FCoE switches.

The Load Tester offers dramatic flexibility that allows testing and verification of even the most complicated traffic topologies, and test configuration is simplified through the use of an intuitive GUI interface. Each physical Load Tester is able to generate up to 8 different traffic profiles and 1024 data streams. As the Xgig Load Tester monitors both transmitted and received traffic, it provides comprehensive throughput statistics for each physical and virtual port while alerting users to data stream errors. Traffic statistics can be viewed either per port or per stream using an intuitive spreadsheet format

that facilitates fast identification and resolution of network issues. In addition, users can automate complex testing processes through scripts using the Load Tester's Application Programming Interfaces (APIs).

The Xgig platform provides the most comprehensive suite of test, analysis, and verification capabilities available for FCoE. The Xgig Load Tester is 100% compatible with other Xgig functions including Analyzer, Jammer, and BERT. This combination of tools enables simplified setup and capture of otherwise difficult-to-detect errors.

Reduced Setup Cost and Complexity

A key benefit of the Xgig FCoE Load Tester is a substantial reduction in the cost and complexity of test setups. When combined with other JDSU testing tools, the Xgig FCoE Load Tester provides a complete test solution for simulating a real FCoE network. These capabilities eliminate the need for expensive servers and extensive storage arrays, thus providing significant savings in terms of rack space, power, cabling, and equipment cost.

Figure 1 shows an example test setup utilizing the Xgig platform and the JDSU Medusa Lab Test Tools (MLTTs). While the Xgig Load Tester blasts FCoE and Fibre Channel frames into the FCoE switch, at the same time the Medusa Lab Test Tools (MLTT) drive real, high IOPS traffic from the host side to the target across the fabric. When problems are detected by the Load Tester, MLTT, or the Analyzer itself, Xgig Analyzer ports positioned in-line capture the real-time traffic required to troubleshoot network issues. In addition, the Xgig 10GE/FCoE Jammer complements the Load Tester's traffic generation capabilities by injecting errors into traffic to emulate network "corner behavior" to verify network performance and robustness. (For more information on these other protocol test tools, please refer to their individual datasheets.)

GUI-Based Configuration

Simplified test setup is critical for facilitating accelerated troubleshooting, especially with complex switch topologies. The Xgig FCoE Load Tester shares a similar configuration GUI to that of the Xgig Fibre Channel Load Tester designed to provide flexible configuration while reducing test setup complexity. Configuring the Xgig FCoE Load Tester, even for the most complex topologies and traffic patterns, is a simple three-step process (see Figure 2). A wizard is also available to facilitate each traffic profile setup.

Triggering Xgig Functions with the Load Tester

The Xgig FCoE Load Tester shares the same hardware and is fully compatible with Xgig's other functions —Analyzer, Jammer, and BERT. The Xgig Load Tester is also capable of automatically triggering Analyzer ports that are connected to the Load Tester through the trigger port on the Xgig chassis. This feature is extremely powerful: even when the Analyzer is positioned in-line to monitor and capture traffic, it does not know what sequences to expect and cannot detect sequence errors. Since the Load Tester is generating the traffic, it can accurately detect sequence related errors and trigger the Analyzer to

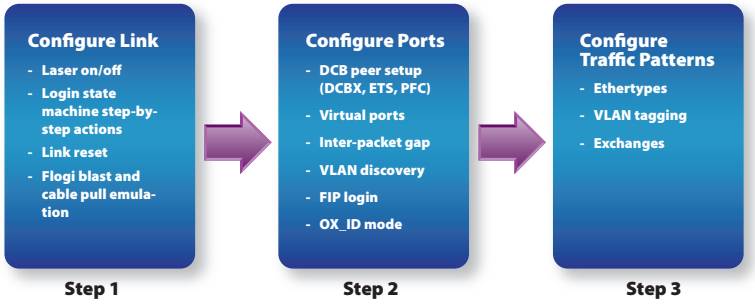

Figure 2: Configure Xgig Load Tester with a simple three-step process

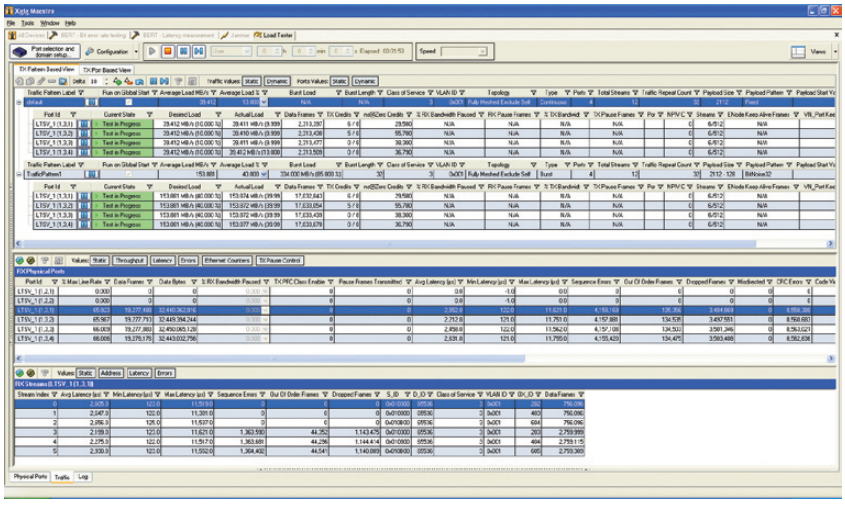

Figure 3: RX and TX Traffic Views

stop traffic capture for later debugging. This distinctive feature also enables Load Tester ports to provide developers with even further insight into network behavior and issues by differentiating between unaccounted frames within each exchange, out-of-order frames, and misdirected frames, thus providing more thorough and accurate measurements of switch performance.

The Xgig Load Tester also facilitates user debugging of error events in the captured trace by listing key information such as the S_ID, D_ID, SEQ_CNT, and OX_ID of frames so that developers can identify error sources. Any information in the trigger frame can be used with the extensive search and filter capabilities available in TraceView (one of the Analyzer's control windows) to quickly locate trigger events. Trigger events include out-of-order frame errors, unaccounted frame errors, misdirected frame errors, and CRC errors (for both Fibre Channel and Ethernet).

Comprehensive Statistics

Traffic statistics provide developers with key insights into how well an FCoE switch is performing and whether any performance impairments or issues are pending. The Xgig FCoE Load Tester monitors both received (RX) traffic and transmitted (TX) traffic (see Figure 3). Comprehensive statistical information is also available through a variety of spreadsheet pane views. On the TX side, port-based and traffic pattern-based views provide statistics such as TX data frames (byte, frame), actual/average bandwidth (MB/s), actual/average data rate, and login frame count. On the RX side, port-based and stream-based views show statistics such as min/average/max latency, RX data frames (byte, frame), and max/actual data rate. Error counters track both FCoE CRCs, loss of alignment, unaccounted frames, out-of-order frames, misdirected frames, and sequence errors.

Automated Testing

Automated testing eliminates time-consuming configuration and management of tests, enabling developers to quickly repeat tests as well as create complex test benches. Developers also need to be able to automate regression testing, an especially critical capability for manufacturing test setups. JDSU facilitates automation of testing processes by enabling all Xgig FCoE Load Tester functions and configurations to be accessed and customized through Application Programming Interfaces (API) using scripts written in C and TCL.

Consistent Interface

Troubleshooting with multiple tools, each with their own interface, unnecessarily complicates testing. The Xgig FCoE Load Tester, which shares the same GUI as the Xgig Fibre Channel Load Tester, is managed by the JDSU Maestro control application. Maestro uniquely allows users to utilize the same GUI to manage different protocols, data rates, and capabilities, thus eliminating the need to switch between different GUIs when using multiple tools. Other Xgig functions supported by Maestro include the protocol-based Fibre Channel and Gigabit Ethernet BERT (Bit Error Rate Test), SAS/SATA Jammer (error injection), and SAS/SATA Generator. Xgig Maestro operates under Windows 2000, Windows XP, Windows Server 2003, and Window Vista (Business and Ultimate version).

Specifications

Features	Specification
Line Rate	IEEE802.3ae 10GbE 10.3125Gb/s
Class of Services	Class 3
Port Type	VN_Ports (256 VN_Ports per ENode) NPIV forwarding
Inter-Packet-Gap (IPG)	Adjustable from 3 to 65535 (64K)
Line Rate Adjustment	Adjustable from 0 to over 100% of theoretical line rate (IPG=12) Line rate dynamically adjustable per each traffic configuration
Link Service Configuration	Supports FIP link initialization and management Supports FCoE link initialization and management
Stream Mode	Continuous Burst
Stream Capacity	1024 TX streams with S_ID and D_ID variations 8 different traffic patterns per physical port
Data Frame Payload	Fixed and user configurable payload patterns (e.g. CJTPAT, CRPAT) Fixed/Random payload size within definable range. No payload
Topology (among FCoE and FC Load Tester ports)	Self (Skip switch login process) Fully-meshed Partially-meshed Data Duplexity: Unidirectional and bidirectional
Flow Control	Supports Priority Flow Control (PFC)
OX_ID	Multi-frame exchange incrementing Single-frame exchange incrementing Single-frame exchange random
Error Injection	CRC errors (both Ethernet and Embedded Fibre Channel frames) Invalid SOF Invalid EOF Oversized payload
Measurement	TX frames, MBytes, line rate, utilization RX frames, MBytes, line rate, min/max/average latency
Error Counters	Sequence errors Out-of-order frame errors Unaccounted frame errors Misdirected frame errors CRC errors Loss of Alignment errors
Trigger	TTL trigger output on detected errors
Automation	API with support of C and TCL

Test & Measurement Regional Sales

NORTH AMERICA
TEL: 1 888 746 6484
sales-snt@jdsu.com

ASIA PACIFIC
apacsales-snt@jdsu.com

EMEA
emeasales-snt@jdsu.com

WEBSITE: www.jdsu.com/snt

Product specifications and descriptions in this document subject to change without notice. © 2009 JDS Uniphase Corporation 30162781 501 0909 XGIG10GFCOELT.DS.SAN.TM.AE Sept 2009